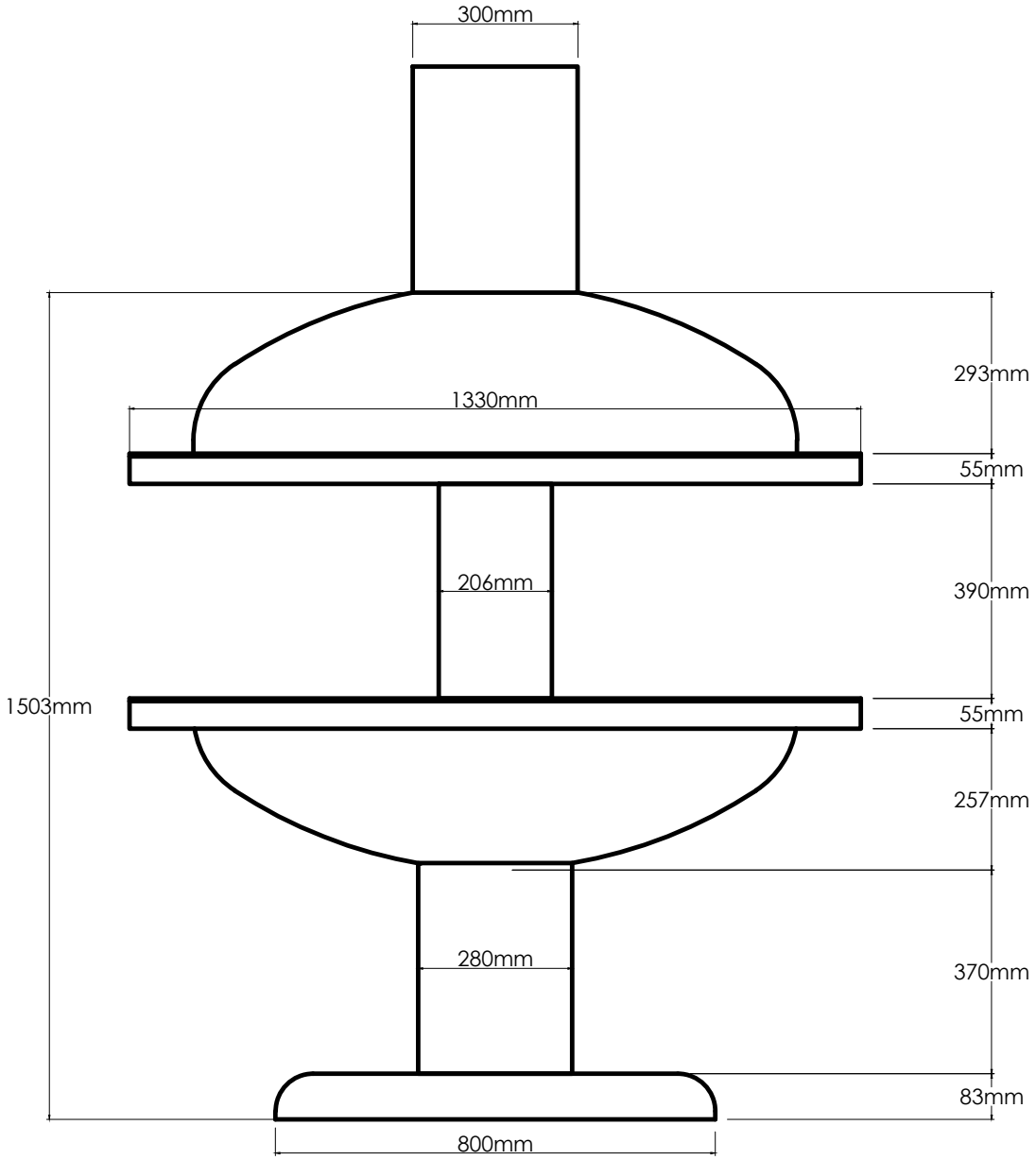
300mm
293mm
1330mm
55mm
206mm
390mm
1503mm
55mm
257mm
280mm
370mm
83mm
800mm

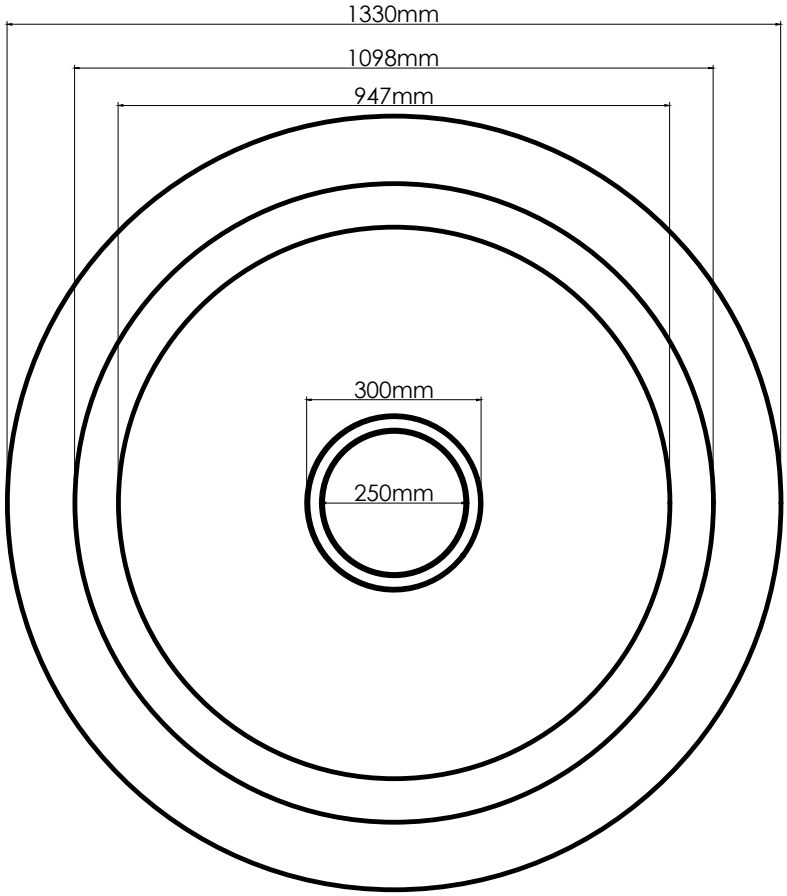
1330mm
1098mm
947mm
300mm
250mm